SAFE 29 EMERGENCY LIGHT TWT2981K

220-240 V 50/60 Hz AC, DC | IP 65 | RAL 9003 | 650 °C | EN 1838 | EN 60598-2-22

Addressable 230 V centrally supplied emergency light

Safe 29 is suited for demanding environmental conditions. It has a plastic frame, and combines functional design with a high protection rating. For emergency lighting applications, an 18 W model is also available. It allows a higher mounting height. The double insulated construction material is of shock-resistant plastic. Safe 29 is available with either a long-life LEDs, or a fluorescent lamp. The luminaires in the Safe 29 product line are suited for interior and exterior applications.

Thanks to the improved LED technology, the new ESCAP models are now available, offering longer mounting distance for both open area (TWS2992WAC) and escape routes (TWS2992WAB). With these new ESCAP models, also 4 m mounting height is now possible.

We reserve the rights to make modifications without notice.
Copyright © 2024 Teknoware. All rights reserved.
Date: April 27, 2024 | Source: teknoware.com/en/emergency-lighting/safe-29-emergency-light-twt2981k

Teknoware Oy | P.O. Box 19, 15101 Lahti | Ilmarisentie 8, 15200 Lahti Finland
Tel +358 3 883 020 | VAT-number FI01494751 | teknoware.com | emexit@teknoware.com

Product Code	TWT2981K
Feature	Intelligent Controller, Tapsa Control
Mounting (standard)	ceiling, wall, surface
Mounting (optional)	recess
Customs Code	94056080
GTIN Code	6438045006390
ETIM Product Class	EC001957
Length	341 mm
Width	94 mm
Height	189 mm
Weight	1,2 kg
Max Input Power VA	15,5 VA
Max Input Power W	13,5 W
Nominal Supply Voltage	220-240 V, 50/60 Hz AC, DC
Protection Class	II
IP Class	IP65
Temperature Range Min - Max	-10...+50 °C
Glow Wire Test of Plastic Materials	650 °C
Light Source	11W/840/4P 2G7
Body Material	plastic
Aperture for Recess Mounting	350 x 215 mm
Colour	RAL9003
Electrical Installation	2/3 x 2,5 mm²
Luminous Flux	540 lm

Emergency lighting for escape routes (ceiling mounting)

Table of 1 lux for escape routes in the middle line according to the norm EN 1838.
Level of measurement 0,02 m, measurement result with battery operation.

We reserve the rights to make modifications without notice.
Copyright © 2024 Teknoware. All rights reserved.
Date: April 27, 2024 | Source: teknoware.com/en/emergency-lighting/safe-29-emergency-light-twt2981k

Teknoware Oy | P.O. Box 19, 15101 Lahti | Ilmarisentie 8, 15200 Lahti Finland
Tel +358 3 883 020 | VAT-number FI01494751 | teknoware.com | emexit@teknoware.com

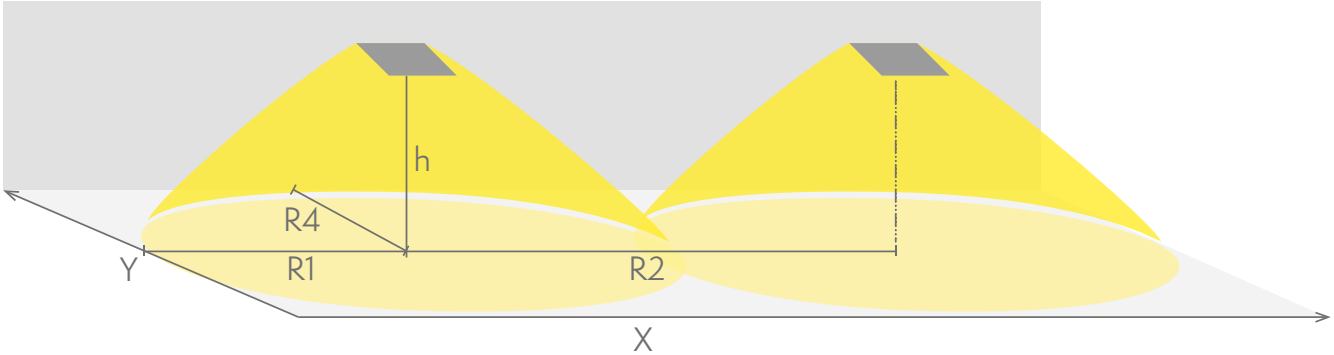

R1 distance from wall (X axis)
R2 installation distance between lights (X axis)
R4 distance from wall (Y axis)

TWT2981K

Mounting height (m)	Below the light lux	R1 (m)	R2 (m)	R4 (m)
		1 lux	1 lux	1 lux
2,5	14	5	13	3
4	5	6	15	3

Emergency lighting for open areas (ceiling mounting)

Table of 0,5 lux for open areas according to the norm EN 1838, 0,5 m edge district is considered in the table.
Level of measurement 0,02 m, measurement result with battery operation.

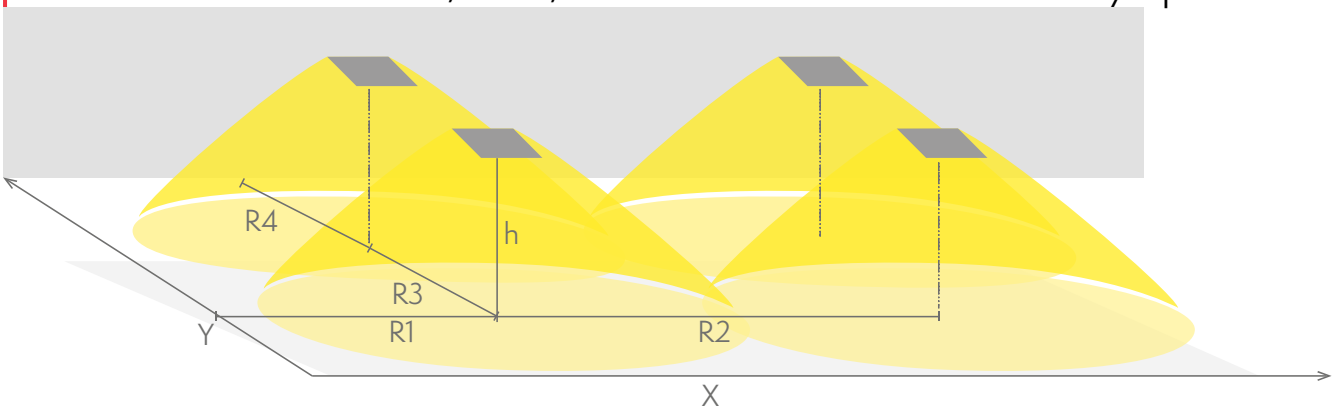

R1 distance from wall (X axis)
R2 installation distance between lights (X axis)
R3 installation distance between lights (Y axis)
R4 distance from wall (Y axis)

TWT2981K

Mounting height (m)	Below the light lux	R1 (m)	R2 (m)	R3 (m)	R4 (m)
		0,5 lux	0,5 lux	0,5 lux	0,5 lux
2,5	14	6,5	12	6	3,5

We reserve the rights to make modifications without notice.
Copyright © 2024 Teknoware. All rights reserved.
Date: April 27, 2024 | Source: teknoware.com/en/emergency-lighting/safe-29-emergency-light-twt2981k

Teknoware Oy | P.O. Box 19, 15101 Lahti | Ilmarisentie 8, 15200 Lahti Finland
Tel +358 3 883 020 | VAT-number FI01494751 | teknoware.com | emexit@teknoware.com

Mounting height (m)	Below the light lux	R1 (m)	R2 (m)	R3 (m)	R4 (m)
4	5	7,5	14	8	4,5

OPTIONAL ACCESSORIES:

SHOCK PROTECTING COVERS FOR EMERGENCY LIGHTS

Product Code	Product Name	Compatible Product Groups
TW77510B	Shock protecting cover TW77510B	ESC 10 Emergency Exit Lights, DISCONTINUED: ESC 6L Emergency Exit Lights, ESC 29 Emergency Exit Lights, Safe 29 Emergency Lights, ESC 81 Emergency Exit Lights

OPTIONAL MOUNTING ACCESSORIES FOR EMERGENCY EXIT LIGHTS

Product Code	Product Name	Compatible Product Groups
XWT2904	Ceiling bracket XWT2904	Safe 29 Emergency Lights, ESC 29 Emergency Exit Lights

SPARE PARTS:

SPARE PARTS FOR EMERGENCY LIGHTS

Product Code	Product Name	Compatible Product Groups
W140002	Diffuser W140002	Safe 29 Emergency Lights, ESC 29 Emergency Exit Lights

We reserve the rights to make modifications without notice.
Copyright © 2024 Teknoware. All rights reserved.
Date: April 27, 2024 | Source: teknoware.com/en/emergency-lighting/safe-29-emergency-light-twt2981k

Teknoware Oy | P.O. Box 19, 15101 Lahti | Ilmarisentie 8, 15200 Lahti Finland
Tel +358 3 883 020 | VAT-number FI01494751 | teknoware.com | emexit@teknoware.com

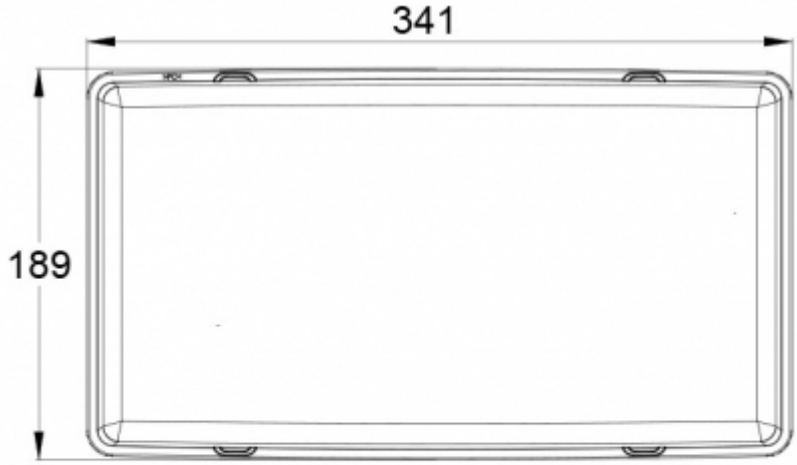

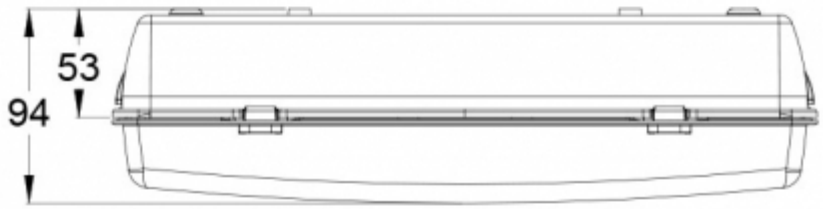

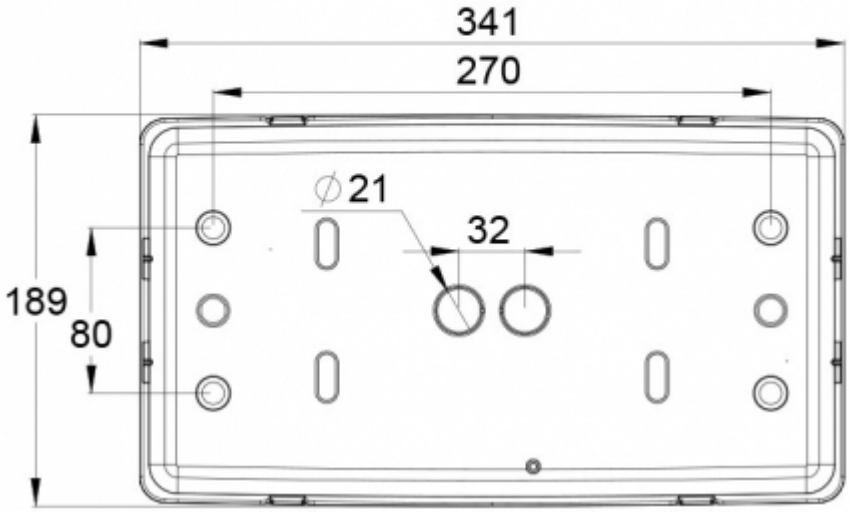

We reserve the rights to make modifications without notice.
Copyright © 2024 Teknoware. All rights reserved.
Date: April 27, 2024 | Source: teknoware.com/en/emergency-lighting/safe-29-emergency-light-twt2981k

Teknoware Oy | P.O. Box 19, 15101 Lahti | Ilmarisentie 8, 15200 Lahti Finland
Tel +358 3 883 020 | VAT-number FI01494751 | teknoware.com | emexit@teknoware.com

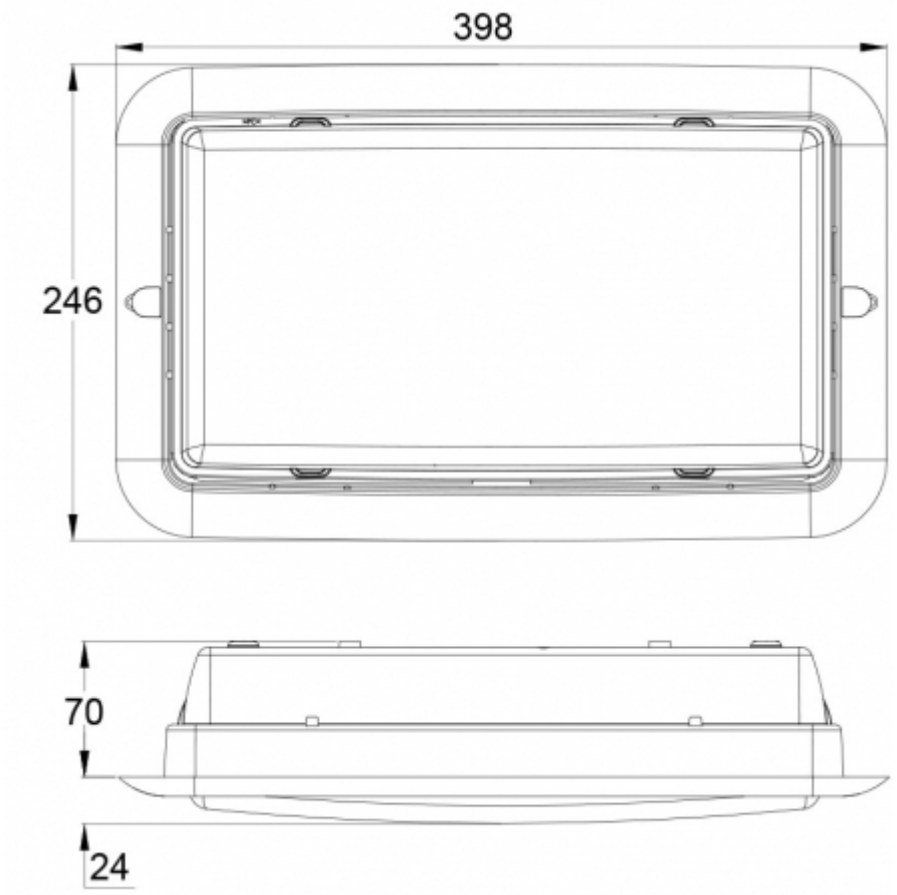

We reserve the rights to make modifications without notice.
Copyright © 2024 Teknoware. All rights reserved.
Date: April 27, 2024 | Source: teknoware.com/en/emergency-lighting/safe-29-emergency-light-twt2981k

Teknoware Oy | P.O. Box 19, 15101 Lahti | Ilmarisentie 8, 15200 Lahti Finland
Tel +358 3 883 020 | VAT-number FI01494751 | teknoware.com | emexit@teknoware.com